BROWNCOATS
Team 7842 Engineering Notebook - Rover Ruckus

Date	Location	Start Time	End Time	Week #
December 7, 2018	AvaLAN Wireless	2:00 p.m.	6:00 p.m.	14
Meeting Goals: Worked on the intake designs, Edited some photos and write ups for the engineering notebook.				
Team Members in Attendance:				
Ian, Megan, Joel, Kye, Jalynn				

Tasks	Reflections
Robot Hardware - Intake/Collector	**Ian:** I began assembling my intake concept today. Over the week, we manufactured the required plates out of plywood, and printed the other custom components that were needed. The core principle of the intake is to use printed "rails" that the balls would roll up (which takes advantage of the constant width of a sphere), into a hopper. The cubes would be pushed through these rails and out the back of the intake, thus filtering the cubes out from the balls. The cubes could later be collected by placing a plate (or something to that effect) between the rails, allowing them to be pushed into the hopper. By the end of the day, I had assembled most of the structure, mounted the lower sweeper, and attached one of the two 393s. I was unfortunately not able to test the whole system, due to not having the second sweeper mounted (which will act as an agitator to make sure that the elements reach the hopper). **Joel:** I repositioned the P.O.P intake tubes so they would not hit each other. Then I glued them in place so they do not vibrate out of place. I also leveled the PVC pipe so it would spin easily.
Robot Hardware - Telescoping Arms	**Megan**: I began brainstorming different ways I could build arms for scoring the minerals in the cargo hold. Many options were brought up, including using REV extrusion and cascading string like we usually used; mini drawer slides we'd experimented with over the summer; and REV's new 15mm Linear Motion Kit V2. In the end, we decided on the new Linear Motion Kit, because we agreed it would probably be the sturdiest. At our next meeting, I'm going to begin putting it together as a prototype.

Ian working on intake prototype

Ian's plywood collector prototype

BROWNCOATS
Team 7842 Engineering Notebook - Rover Ruckus

Date	Location	Start Time	End Time	Week #
December 8, 2018	AvaLAN Wireless	2:00 p.m.	6:00 p.m.	14
Meeting Goals: Worked on Intake concepts				
Team Members in Attendance:				
Ian, Brooklynn				

Tasks	Reflections
Robot Hardware - Intake/Collector	**Brooklynn:** Today I continued to work on my claw prototype to see if I can make it be able to hold the elements better once they were picked up. I tried to duck tape the3D printed claws that were going to pick up the relic last year to see if having a curved arm to guide them in and keep them there would work, but it didn't. So I curved 2 pieces of metal, put them on the back and put a longer piece of curved metal on the two servos and it worked better. The down side to it is that you have to come at the elements from the top. **Ian:** Today I finished my intake concept. Unfortunately, we discovered a few issues with it. Firstly, the intake is not rigid enough near the bottom to prevent the balls from sliding through the filtering rails, because the plates simply flex out of the way. Secondly, when the balls *do* go along the filter rail, the 393s either stall, or the sweepers don't have quite enough reach. I think the stalling is due to the rigidity of the fuel line tubing we were using, so I'm going to look for alternatives that are slightly more flexible. The cubes do make it through the filter rails very well, however.
Robot Hardware - Arm Actuator	**Ian:** We also discussed plans and ideas for actuating the telescoping arm today. I proposed an idea that I had been thinking of for a week or so. The basic concept is to run two parallel arms on bearings on a shaft. This shaft would also be running on bearings, allowing it to spin independently of the arm rotation. This is called a coaxial shaft. One of the arms would have a pulley mounted to it, which would be driven by a motor at approximately a 360:1 overall ratio (which is

Robot Hardware - Arm Actuator (continued)	**Ian:** roughly what we had determined in testing). This arm would also have a gear mounted to it (which would rotate as the arm rotates), and this gear would rotate a smaller gear to rotate a second shaft. This second shaft would transfer rotational power to the other arm, allowing it to rotate smoothly. The coaxial shaft would then be belted to another motor, and then this shaft would control arm *extension.* Extension would be controlled by a closed loop belt with a clamp on it, rather than a spool. This would eliminate the need for continuous spool stringing, and would only require cascade stringing on the other stages. This solution provides extension and rotational power to *both* arms, rather than just one, which should prevent binding in the system. After discussing this and other options, I was told to model my idea in CAD over the rest of the weekend, to see if the idea is viable.

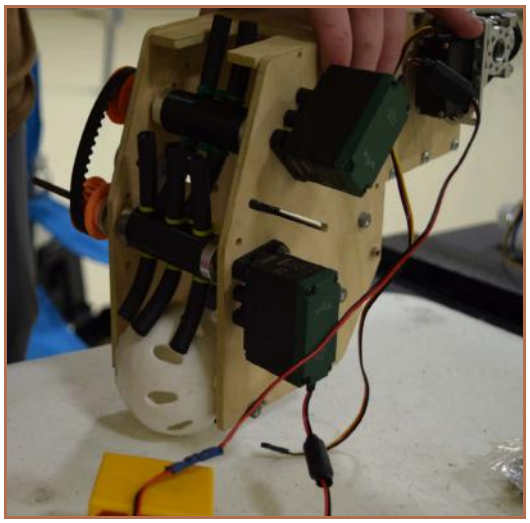

Ian's intake prototype

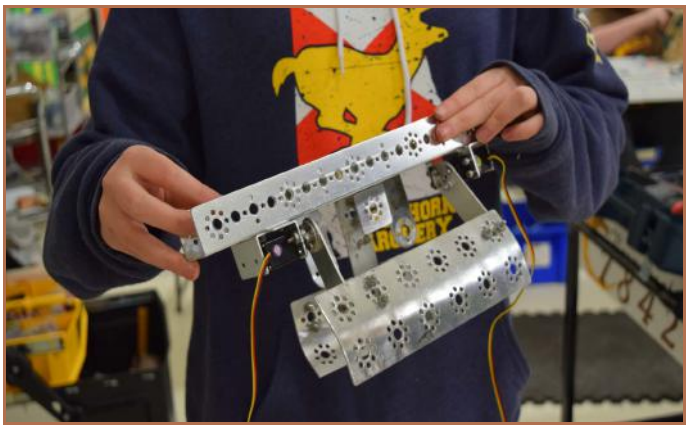

Brooklynn's claw intake prototype

BROWNCOATS
Team 7842 Engineering Notebook - Rover Ruckus

Date	Location	Start Time	End Time	Week #
December 9-11, 2018	Home	Various	Various	14
Meeting Goals: Design arm actuator				
Team Members in Attendance:				
Ian				

Tasks	Reflections
Robot Hardware - Arm Actuator	**Ian:** I began designing my arm actuator idea by evaluating all of the constraints that I would have to follow. These were primarily cost, weight, and size. I then took measurements of the area of the robot where the arms would mount. With the dimensions and constraints in mind, I decided that I would need to make extensive use of 3D printed parts (partially due to the lower return time as compared to metal, and partially due to weight). Only the primary plates would be made out of metal (likely hand-made, because the machine shop return time is unfortunately too long, especially over the holidays). Additionally, I decided to use .75” round ID bearings (instead of ½” hex ID and 3/8” hex ID bearings) with printed hex adapters pressed in. This is because we already had 8 .75” ID bearings, and we did not have any hex bearings. Unfortunately, this decision also made a compromise with weight, because the larger bearings are significantly heavier. However, I decided that such a compromise would be worth it, because hex bearings are fairly expensive. Having these constraints in mind, I began sketching the basic concept, planning gear ratios, etc. In order to achieve a 360:1 ratio for the arm actuation, a 6:1 ratio would be needed from a Neverest 60:1 gearbox output. In order to achieve this, a two stage reduction would be required. This is because a 6:1 belt reduction from an 18t HTD 5mm pulley would need a 108t pulley, which would be roughly 6.75” in diameter. Such a pulley is far too large for the space constraints we’re working under, so a multi stage reduction is needed. Fortunately, a 2:1 gear reduction is easily achievable, and

Robot Hardware - Arm Actuator (Continued)	**Ian:** a 3:1 belt reduction is also easily done. To accomplish these ratios, a 24t gear would be attached to the output shaft of the Neverest gearbox, which would drive a 48t gear (thus providing the 2:1 gear ratio). This 48t gear would drive a shaft, which drives an 18t pulley. This pulley would then be belted to a 54t pulley, providing the 3:1 ratio, for an overall ratio of 6:1. A tensioner would be required on the belt, however, because there would be insufficient wrap on the smaller pulley otherwise. For the arm extension, I decided on using a Neverest Orbital 20 to power it. This is because we've found them to be extremely reliable motors, and the speed should be adequate for the application. No reduction will be required for extension, so everything will be powered by 1:1 belts. In order to attach the main structural plates of the arms to the robot, I decided to use 0.75" x 0.75" angle aluminum, at 1/16" thickness. This angle stock is *extremely* light, while still being very rigid due to the bent nature of the angle. Additionally, it's easy to machine, and will integrate into the robot body well. Before designing the gearboxes, I modeled the primary plates of the system. This allowed me to better see how much room I had to work with, and where the most optimal place to mount the motors would be. **(See Coaxial Actuator Image).** After modeling that system, I decided that mounting the motor underneath a diagonal lift support beam would be the least intrusive spot. The actuator gearbox is mounted to the same angle aluminum as the bearing plates, and the motor itself is mounted by an adjustable REV motor mount. **(See Actuator + Gearbox Image).** For the extension motor, I mounted it underneath the other diagonal support beam. However, this mounting plate attached directly to some lift structure extrusion. The motor itself is attached to the plate by a CNC milled motor mount from last year. Both of the belts from the gearboxes have tensioners to take up slack, which will lessen the requirement to be extremely precise with certain components. **(See Actuator Assembly Image, See Robot Model Image).**

Robot Hardware - Intake/Collector (Continued)	**Ian**: The arm extension is ultimately driven by two closed loop belts with toothed clamps on them to attach to the belt. These clamps then attach to the first stage of the lift, allowing the motion of the first stage to be cascade strung out to the rest of the stages. This removes the need for a spool on both sides, reducing complexity and points of failure.

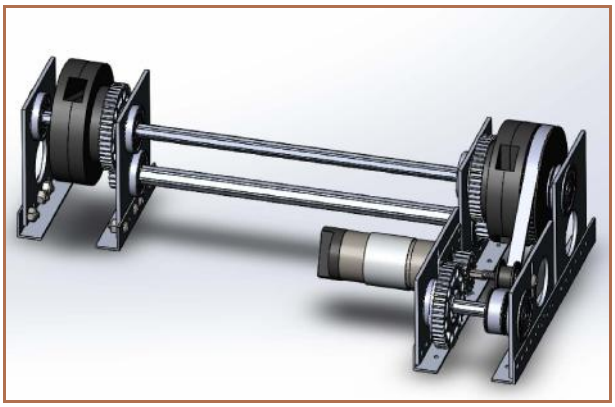

Actuator + Gearbox

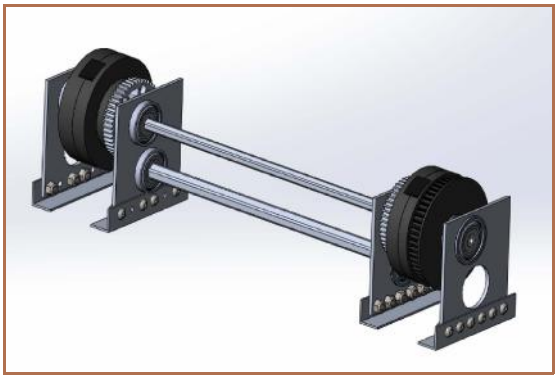

Actuator Rotation

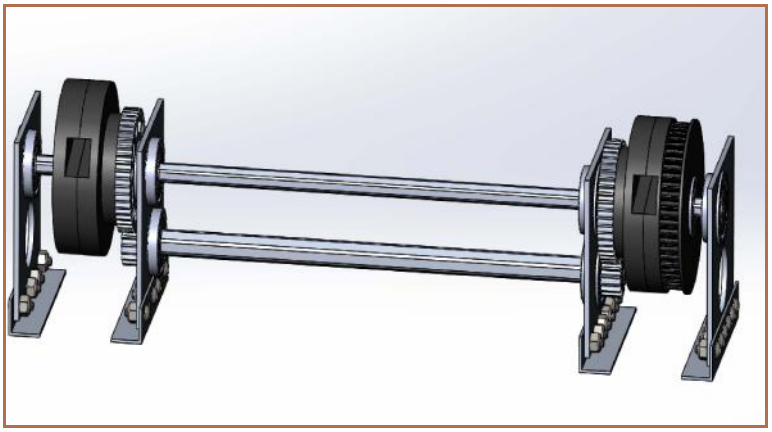

Coaxial Actuator

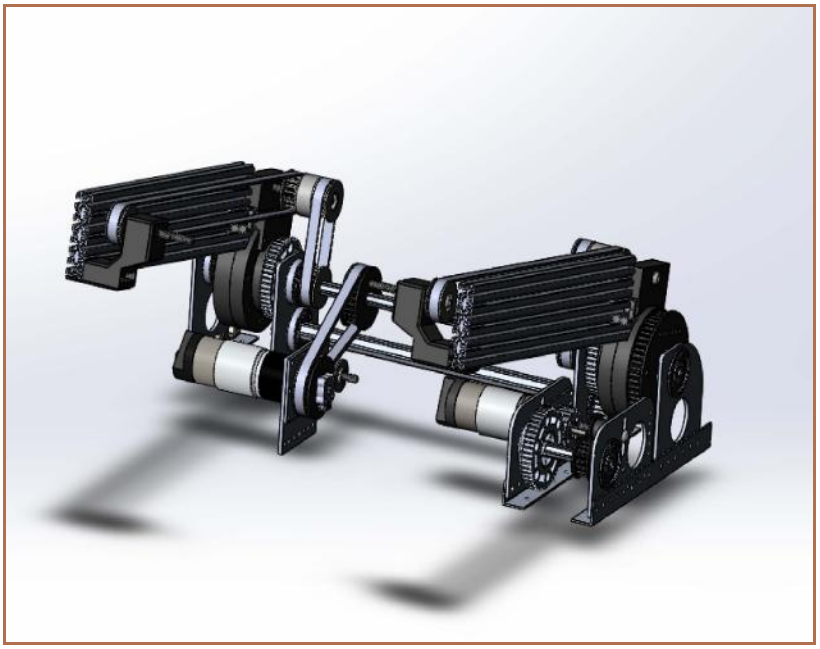

Telescoping Arms and Actuator Assembly

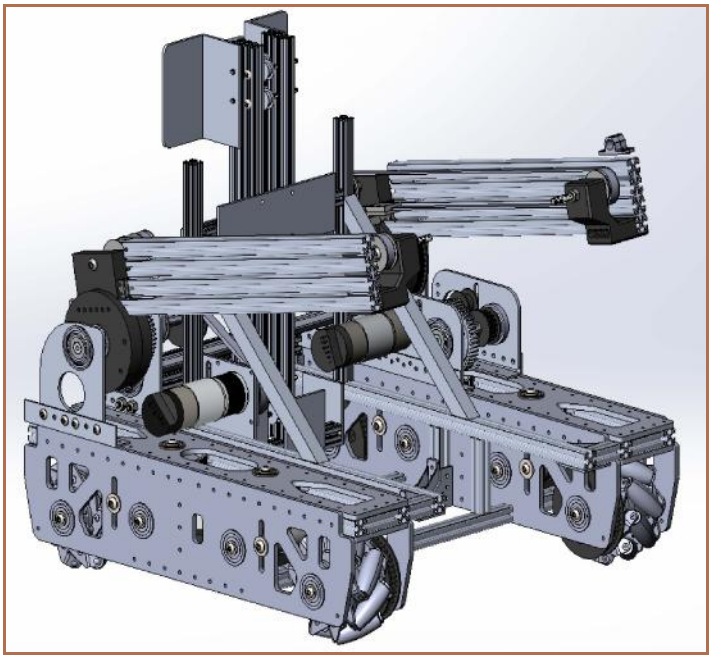

Robot Model

BROWNCOATS
Team 7842 Engineering Notebook - Rover Ruckus

Date	Location	Start Time	End Time	Week #
December 12, 2018	AvaLAN Wireless	12:00 p.m.	5:00 p.m.	15
Meeting Goals: Begin prototype of telescoping arm design, begin crater-side autonomous				
Team Members in Attendance:				
Ian, Megan				

Tasks	Reflections
Robot Hardware - Telescoping Arms	**Megan:** On Wednesday, December 12th, I began working on a prototype for the telescoping arm that the team decided to use for scoring minerals in the lander. We discussed many different options and ways to go about it, but eventually we decided to play with the new REV 15mm Linear Motion Kit V2. I used their instructions on how to put the extrusion together. First, I got four different pieces of REV extrusion, each 16 inches long. Then, I put together two of the beams using the double sided sliders and sliding plates. Then, I took the next two beams and did the same to them. Once I had them both together, I turned the beams around and used a single double sided slider and sliding plate at the top, and then at the bottom, and connected the two. After all of this was finished, I added the end caps to three of the four beams, both on the top and the bottom. Then, I attached bearings to the end caps using the bearing caps and screws. At the bottom of the lift, I added screws and locknuts into the end caps and extrusion as anchor points for the string. Once I'd finished that, I began stringing the first side, using the cascading method. And once that was complete, I did the same thing to the other side, so the lift could go up and come back down when it was motorized. I wasn't able to complete the telescoping arms at this meeting, so my goal for the next one is to finish that side as well.
Robot Software - Autonomous	**Ian:** Today we discussed the newly modeled actuator idea, and began ordering parts. Additionally, I started work on a crater-side autonomous path. I'm hoping to use mecanum strafing to better maneuver to the cube in the sampling field, rather than point turns and lines. Strafing seems consistent enough to work with. Drift is minimal, and the speed is overall decent.

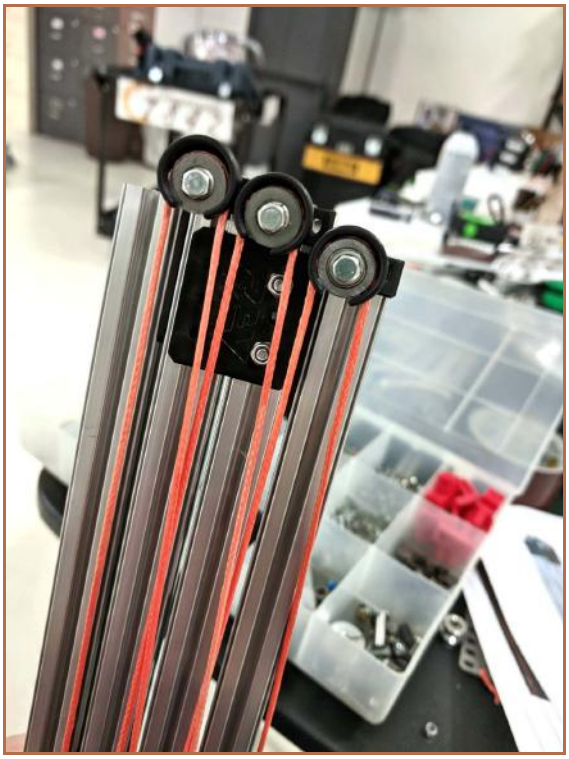

Telescoping Arms with the REV 15mm Linear Motion Kit V2

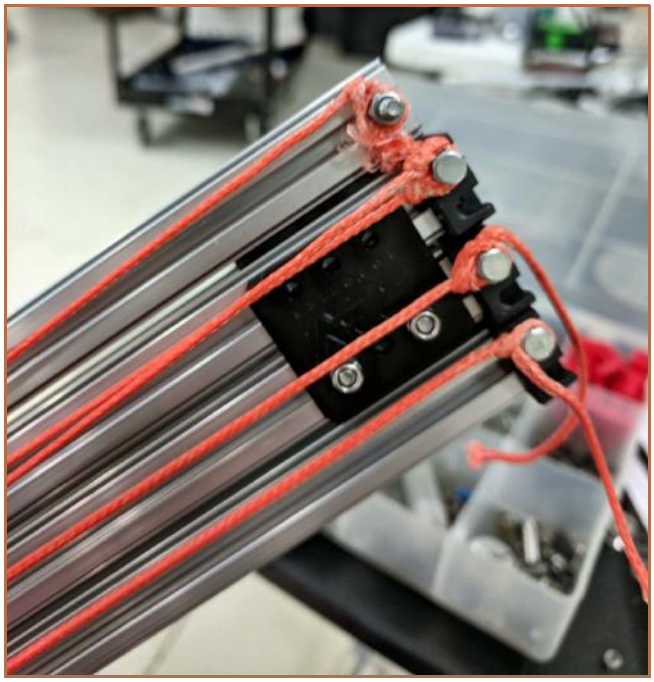

BROWNCOATS
Team 7842 Engineering Notebook - Rover Ruckus

Date	Location	Start Time	End Time	Week #
December 14, 2018	AvaLAN Wireless	2:00 p.m.	6:00 p.m.	15
Meeting Goals: Continue work on telescoping arms, intake designs, and autonomous				
Team Members in Attendance:				
Megan, Ian, Kye, Joel, Jalynn				

Tasks	Reflections
Robot Hardware - Telescoping Arms	**Megan:** On Friday December 14th, I continued my work on the telescoping arms. I had some trouble putting together the beams, as the side plates were sticking a lot and it took a while for me to make sure everything was moving smoothly. Once I was finished with all of this however, we decided that we wanted to make only one of the beams 16" and make the rest of them 12 3/4". I'd run out of time at this point though, so my goal for the next meeting is to take apart the lifts so we can cut the beams and then I can begin putting them back together again.
Robot Software - Autonomous	**Ian:** I continued work on the crater-side autonomous route today. I encountered relatively few issues while programming the various paths involved. Unfortunately, I ran out of time and wasn't able to finish the last segment of the route. Additionally, we buttoned up a few things on the robot (making sure bolts were tight, checking all the cables, etc.) in preparation for the scrimmage.
Robot Hardware - Intake/Collector	**Joel:** I tested the P.O.P intake and determined that the intake was not efficient enough nor light enough to work. So this is when the idea was abandoned. Now we started to think of a way to use a rubber band combine intake.

Engineering Notebook - Outreach and Meeting Entries - Display boards	**Jalynn:** At today's meeting, I worked on the outreach entry for *FIRST* Lego League (FLL) Volunteering, the Arkansas Qualifier, and our robot demonstration at the FLL qualifier. Once I finished those, I made summaries of them and Nerdcon to add to the outreach board. After that, I updated any meeting entries, and started on the November and December meeting entries. After that, Ms. Jean needed help from Kye and me. We decided to attach lights to our cart for decoration! We used special lights that the team had gotten a couple years ago from Hamfest that had tape on the back and were cuttable, so we could make it the perfect length for the cart. We added two strips: one on top and one on the bottom. The top strip changes colors constantly, while the bottom one can be changed to red or blue depending on our alliance! It was really cool, only with the lights attached, our magnets with our logo wouldn't fit anymore; so next week I'm going to make new ones.

Joel working on his intake design

Megan demonstrating her telescoping arm design

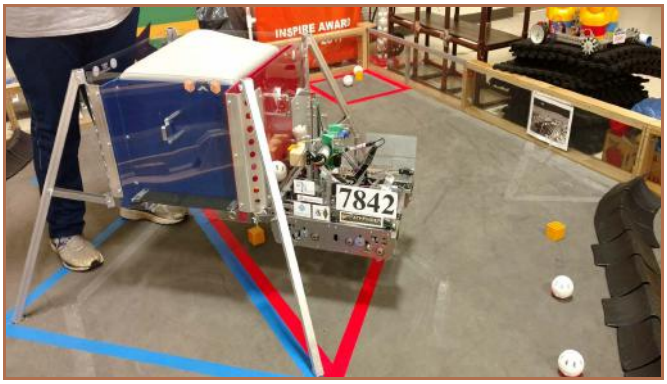

Ian working on autonomous

BROWNCOATS
Team 7842 Engineering Notebook - Rover Ruckus

Date	Location	Start Time	End Time	Week #
December 17, 2018	AvaLAN Wireless	12:00 p.m.	5:00 p.m.	16
Meeting Goals: Continue working on arms, diagnose and repair drive train problems				
Team Members in Attendance:				
Ian, Megan, Joel				

Tasks	Reflections
Robot Hardware - Telescoping Arms	**Megan:** I took apart the current versions of the telescoping arms that I had been working on, and one of our mentors cut three of the four extrusion pieces for each lift to 12 3/4", and we kept the fourth beam at 16". Once he was finished, I had all of the beams in the sizes I needed them, so I was able to continue my work. I began piecing the lifts back together, and I added all of the sliders and side plates. One thing I noticed immediately was how much the beams were sticking. None of them would move smoothly, so I tried loosening or tightening different screws and making minor adjustments, but nothing seemed to work. I ran out of time to completely fix it, so my goal for the next meeting is to help smooth everything out.
Robot Hardware - Intake/Collector	**Joel:** I began building a new intake design based on a combine.
Robot Hardware - Drive Train	**Ian**: At this meeting, we attempted to diagnose the issues that we discovered at the scrimmage on Saturday (the back left drive wheel began misbehaving. We inspected the drive behavior on a table to see what might be causing the issue. It appeared to be similar to the level shifter issues we've encountered in the past.). We began by replacing the level shifter on the back left wheel. This seemed to help with the problem, but not alleviate it entirely. We then plugged a different motor in, and the problem persisted. We swapped the entire encoder cable (level shifter, and both cables) next, which didn't have a noticeable impact on behavior. At this point, we were leaning towards either an issue with the expansion hub itself, or a software issue.

Megan's telescoping arms

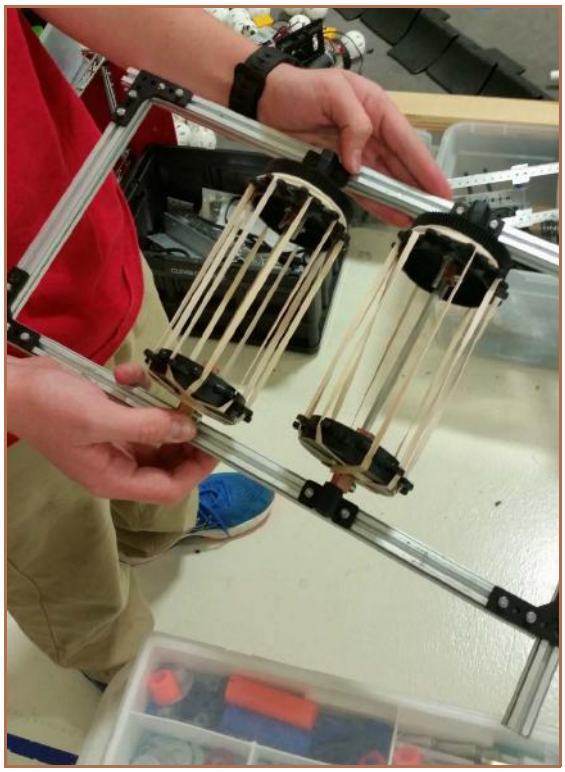

Joel's new rubber band combine intake design

BROWNCOATS
Team 7842 Engineering Notebook - Rover Ruckus

Date	Location	Start Time	End Time	Week #
December 18, 2018	AvaLAN Wireless	12:00 p.m.	6:00 p.m.	16
Meeting Goals: Continue working on arms and diagnosing and debugging drive train				
Team Members in Attendance:				
Ian, Megan, Joel				

Tasks	Reflections
Robot Hardware - Telescoping Arms	**Megan:** I continued my work on the telescoping arms. To help with the sticking that appeared while they were sliding, I tried changing the sides of the extrusion where I mounted the sliders. While this helped for some of the arm, it didn't help for all of it. After a lot of testing and adjusting, I realized that it wasn't the sliders causing the problems like I'd originally thought it was. Instead, it was the side plates. I tried taking the plates off, and it helped immensely. My only concern with keeping them off was the rigidity the plates lent. However, it wasn't too bad without them, and I'm pretty sure when we connect the two lifts together, it should be fine. And besides, we didn't want it too tight so it wouldn't have the freedom to move. My only remaining issue was the bolts in the sliders. I wasn't convinced they wold stay in the beams without moving, so for the next meeting, I'm going to come up with a way to keep them in place.
Robot Hardware - Drive Train	**Ian**: Today was also spent on diagnosing and debugging the back left drive wheel. We continued our trouble shooting by plugging the motor into an entirely different port (on a different hub) and changing the configuration. The problem still persisted, implying that this was a software issue, and not an issue with the REV hub. To confirm our suspicions of this, we plugged the motor back into the original port, and swapped motors around in the configuration (setting back left to front left's motor, and vice versa). The problem was now occurring on the front left wheel, rather than the back left wheel. After determining it was likely a software issue, I examined the teleop code for any obvious issues. It appeared that it was as simple as motor power not getting set to zero when the joystick

Robot Hardware - Drive Train (continued)	**Ian**: isn't being pushed (there was no "deadzone" set on the stick, essentially), causing one of the motors to spin slightly when little to no power was applied. With this changed, the behavior no longer presented itself. With our issue seemingly fixed, I placed the robot on the field and tried to drive the robot. However, the original issue of the back left wheel not turning presented itself again. After examining the motor and assembly, we realized that the set screw on the motor pinion had backed itself out (which was surprising, because it's an extremely low torque stage), and power was only being transferred to the wheel when no resistance was applied. Once resistance was applied, the pinion simply slipped on the shaft. Thinking through this problem, we concluded that using red Loctite was the best course of action. Unfortunately, this would mean that we would not be able to remove the pinion from the motor shaft, even if we wanted to. We decided that this tradeoff was worth it, and applied red Loctite to the pinion set screw, as well as to the motor shaft itself. Additionally, we added a drop of super glue on the motor shaft for good measure.

Megan working on her telescoping arms

Ian working hard on debugging the drive train

BROWNCOATS
Team 7842 Engineering Notebook - Rover Ruckus

Date	Location	Start Time	End Time	Week #
December 20, 2018	AvaLAN Wireless	12:00 p.m.	5:00 p.m.	16
Meeting Goals: Continue work on telescoping arms, Testing drive motors				
Team Members in Attendance:				
Ian, Megan, Joel				

Tasks	Reflections
Robot Hardware - Telescoping Arms	**Megan:** I continued my work with the telescoping arms. Because of all the trouble we've been having with the slider inserts inside of the extrusion, we decided to take out the bolts and the nuts and try something different. We took some thin copper wire and wrapped it around each slider, and then we fed the ends of the wire through the holes in the end caps and tied the wire around the screw that was holding the end caps in place. This took away all of the sticking we were still experiencing, allowing the arms to slide smoothly. After that, we started looking at stringing the arm. We started with a standard cascading method: looping the string through the v-bearing and tying it off at the anchor points on the bottom side. The string wasn't tensioning well at all, and after a bunch of brainstorming, we decided to tie the string onto a spring at the first anchor point. This allowed the strings to tension properly and not loosen like it had been before. We also decided to cut off parts of the bearing cap, because it encased the string too tightly and caused a lot of friction. I ran out of time to string the second lift before the day was over, so we decided to finish it at our regular meeting tomorrow.
Robot Hardware - Drive Train **Robot Software** - Autonomous	**Ian:** We spent today by testing all of the drive motors after the Loctite application. One motor in particular seemed to bind a bit, so we allowed it to run in for around 5 minutes, which seemed to resolve the issue. We also noticed that the belt tensions were inconsistent across the four wheels, so we adjusted those to be closer together. We then tested the drive train, which seemed to handle very well. Autonomous paths had to be adjusted to account for the change in drive behavior, but the adjustments were not major.

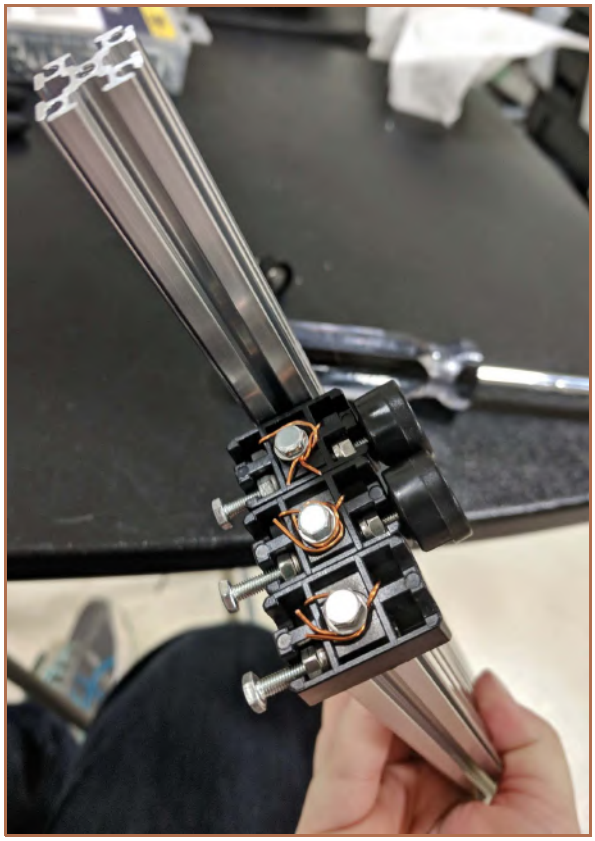

Copper wires holding sliders in place

Spring tensioners on the cascading strings

BROWNCOATS
Team 7842 Engineering Notebook - Rover Ruckus

Date	Location	Start Time	End Time	Week #
December 21, 2018	AvaLAN Wireless	2:00 p.m.	6:00 p.m.	16
Meeting Goals: Continue working on arms, intake designs, and actuator				
Team Members in Attendance:				
Ian, Megan, Brooklynn, Kye, Jalynn				

Tasks	Reflections
Robot Hardware - Telescoping Arms	**Megan:** I continued stringing the arms. Instead of using the springs like we'd originally decided, we wanted to try something else. In the place of the springs, we used eye bolts. I had one of our mentors cut a small piece of a beam for me and screwed it onto the extrusion. Then, I attached the eye bolt using nuts on either side of the screw to hold it in place. While attempting to string the arm like this, I realized the eye bolt would move around too much with just the regular nuts, so I took both of those off and attached a locknut to the bottom of the eye bolt. The tension of the string along with the locknut was enough to keep the eye bolt in place. During the meeting, I was able to complete one of the telescoping arms completely. At our next meeting, I'm going to finish stringing the other as well.
Robot Hardware - Intake/Collector	**Brooklynn:** Today, I put on my final touches to my claw intake prototype. I first wrapped the front and back with something that would help it pick up cubes. Last, I removed the pieces that were supposed to help hold in the elements if it was flipped upside down to hopefully make it lighter. When that was done, I sat with Kye and Jalynn to help if needed.
Robot Hardware - Arm Actuator	**Ian:** I spent today punching all of the relevant hole marks in the angle aluminum for the actuator assembly. I used printed 1:1 templates for hole placement. The tolerances won't be perfect unfortunately, but they should be good enough for the application.

Engineering Notebook - Meeting Entries	**Jalynn:** During today's meeting, I worked on putting in all the new meeting write-ups from the team that Ms. Cindy put on the computer. I typed up the write-ups that Brooklynn wrote as well as typed up my own write-ups. I also put together the outreach page for last week's scrimmage and started to change the Arkansas qualifier entry I made from outreach format to meeting format. I got a lot done for the Notebook, but I still have a lot more to do tomorrow.

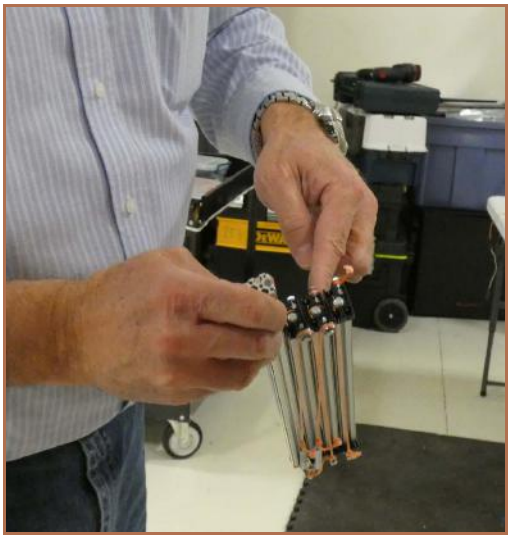

Brooklynn testing her claw intake design

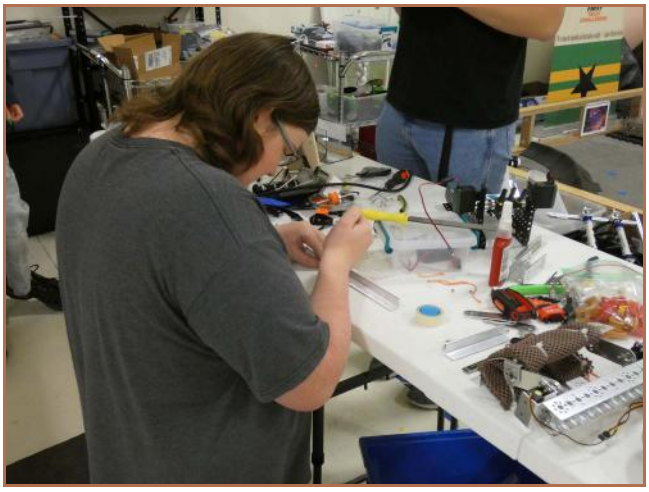

BROWNCOATS
Team 7842 Engineering Notebook - Rover Ruckus

Date	Location	Start Time	End Time	Week #
December 22, 2018	AvaLAN Wireless	12:00 p.m.	5:00 p.m.	16
Meeting Goals: Continue working on arms, intake designs, and actuator				
Team Members in Attendance:				
Ian, Megan, Brooklynn, Kye, Jalynn				

Tasks	Reflections
Robot Hardware - Telescoping Arms	**Megan:** On Saturday December 22nd, I started stringing the second telescoping arm. First, I added the eye bolts to each side before stringing the lift. It took a couple of tries to get the tensioning on the string where I wanted it, but eventually after tightening the locknut on the eye bolt and tightening the knots, I was able to complete it. Once I was finished, Ian added both arms to the actuator.
Robot Hardware - Intake/Collector	**Brooklynn:** Today I continued to think if the claw prototype needed some more work, but I think it's completed. So I helped where and if needed.
Robot Hardware - Arm Actuator	**Ian:** All of the metal actuator plates have been finished, so we began assembly of the subsystem. Early on, we encountered a tolerance issue with bearing hole spacing. Two of the bearing holes were too close together, causing a gear mesh to be a near-interference. This reduced efficiency of the assembly by a great deal, and will decrease the life of the gears. To solve this, we filed out the upper bearing hole to be more of a slot, and pushed the bearing up to the top of the hole. This path seemed like a valid direction to go down, but we ran out of time before being able to confirm this.
Engineering Notebook - Meeting Entries	**Jalynn:** At this meeting, I continued my work on the meeting entries. I also added the last couple write-ups from the Arkansas qualifier to the entry; since the qualifier is to be formatted like a meeting page, I decided to get creative. I read through my teammates' entries very closely and put them each in a different section based on the view they gave of the event. For example,

Engineering Notebook - Meeting Entries (continued)	**Jalynn:** Megan and Kye gave an overall summary while Brooklynn gave a more detailed sequence of the event, and Ian focused more on how our robot functioned. In the end, I had three categories: Overview, Sequence of Day, and Overall Robot Operation. Finally, before the end of the meeting, I put together blank meeting pages for the rest of December and all known January so when I get write-ups, I can just insert my team's write-ups.

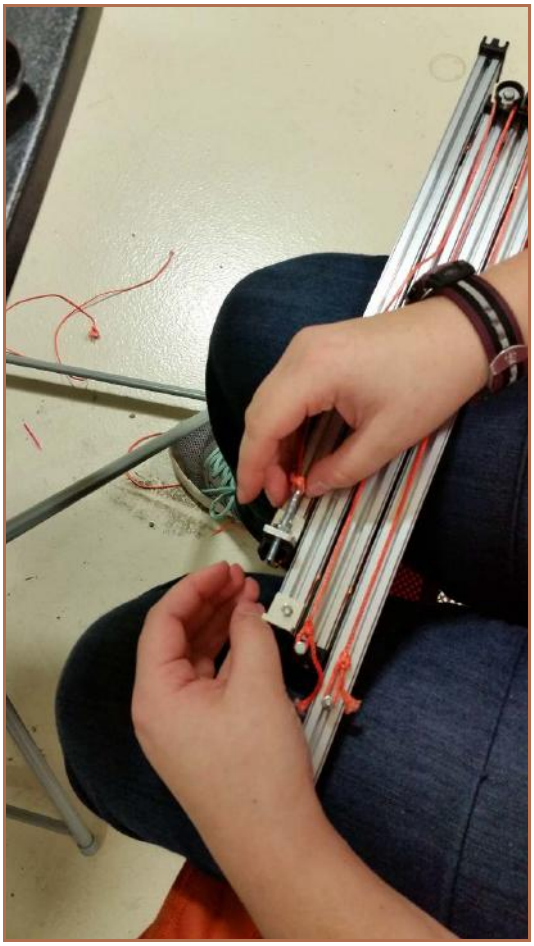

Megan working on telescoping arms - adding the screw eyes

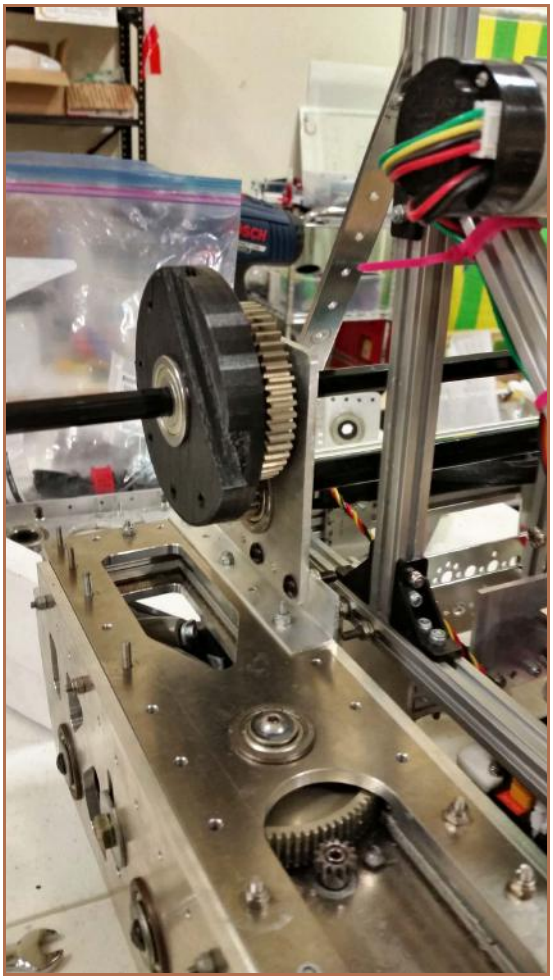

Assembling the actuator

BROWNCOATS
Team 7842 Engineering Notebook - Rover Ruckus

Date	Location	Start Time	End Time	Week #
December 23, 2018	AvaLAN Wireless	11:00 p.m.	4:00 p.m.	17
Meeting Goals: Continue working on actuator				
Team Members in Attendance:				
Ian				

Tasks	Reflections
Robot Hardware - Arm actuator	**Ian**: We started today by further filing out the troublesome bearing hole to resolve the gear spacing problem. Unfortunately, the bearing hole was now too large to support the bearing. To resolve this, we cut a failed plate in half and used it as a shim to seat the bearing properly. We then fastened this plate to lock the bearing in place. With this problem resolved, the rest of the actuator assembly went relatively smoothly. By the end of the day, the rotation assembly had been built and tested. Extension-related components have not been assembled yet, however.

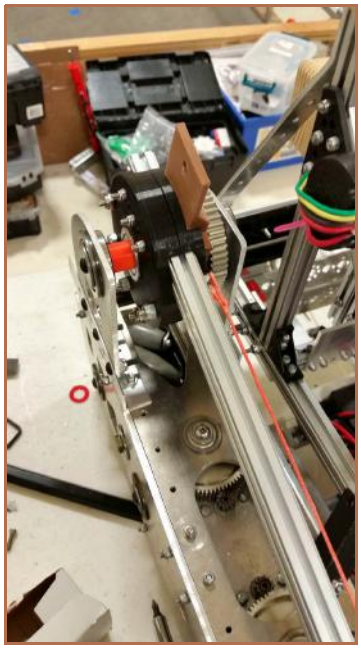

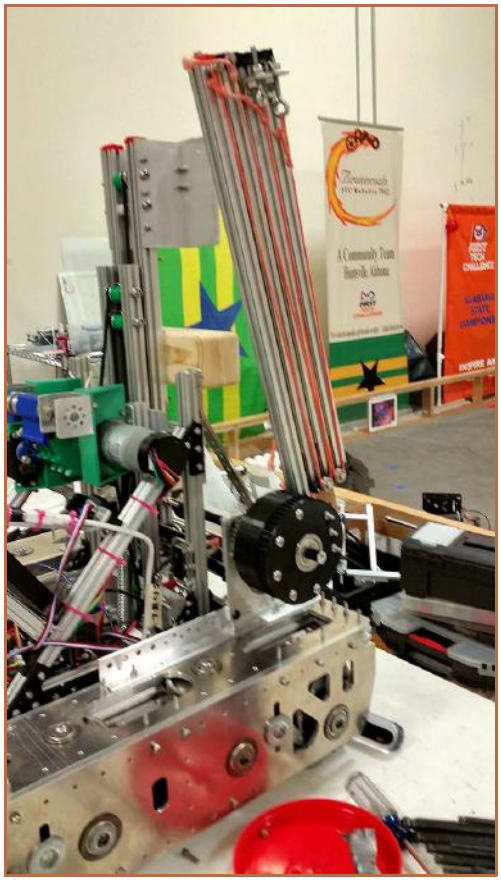

Telescoping arms mounted to the actuator

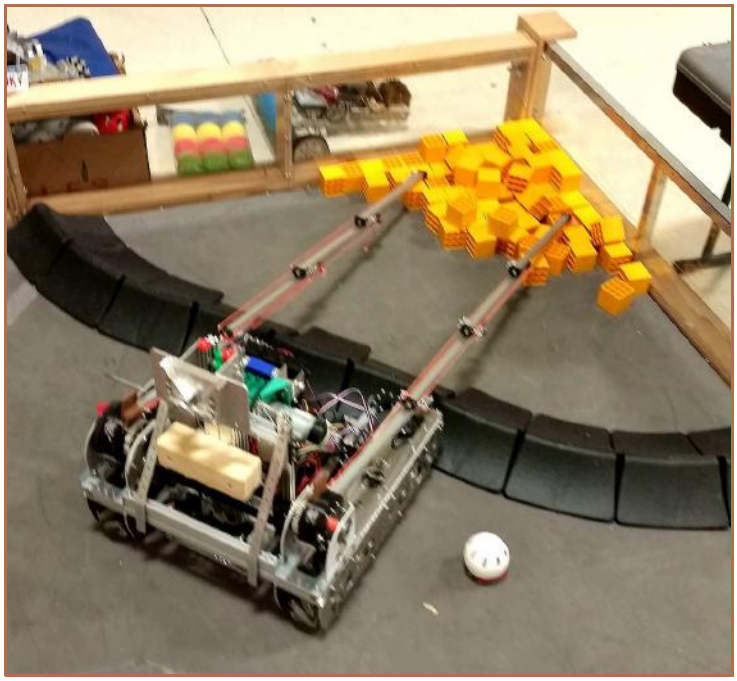

Demonstrating that the telescoping arms reach all the way to the back of the crater

BROWNCOATS
Team 7842 Engineering Notebook - Rover Ruckus

Date	Location	Start Time	End Time	Week #
December 26, 2018	AvaLAN Wireless	2:00 p.m.	6:00 p.m.	17
Meeting Goals: Work on actuator and intake design				
Team Members in Attendance:				
Ian, Joel				

Tasks	Reflections
Robot Hardware - Arm Actuator	**Ian:** We started work on the extension assembly today. During assembly, we realized that the original design to use cantilevered bolts for the extension pulleys to ride on would not be adequate, due to the extreme tension applied to the pulleys in an ideal scenario. Additionally, we discovered that the long extension belts are too loose. To resolve this, we are going to reprint the pulleys on both ends of it with an extra tooth on each. This should take up a significant amount of the slack. Finally, the pillow blocks for the pulleys at the end of the extension belt need to be reinforced at a couple of points.
Robot Hardware - Intake/Collector	**Joel:** I built a new combine intake out of rubber bands. I also tried to study the new arms to try to understand how they work since I missed the day that they were built.

Joel testing his new intake design

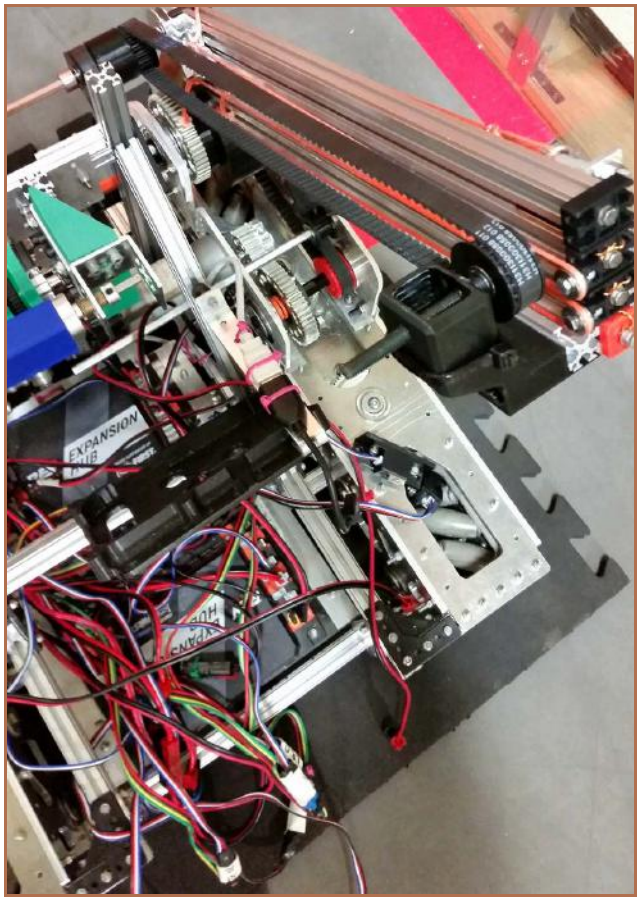

Close-up of the belt-driven extension actuator from the pillow block end

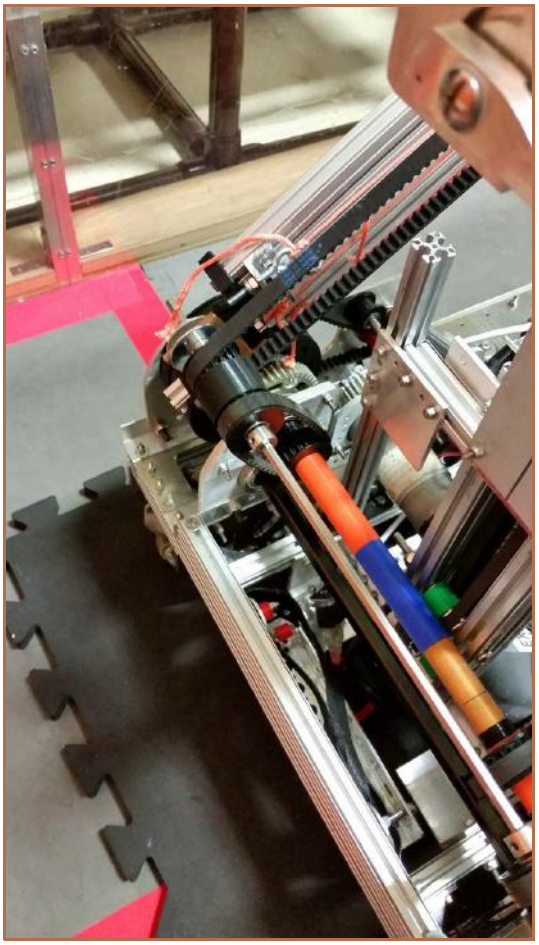

Extension actuator from the drive pulley end

BROWNCOATS
Team 7842 Engineering Notebook - Rover Ruckus

Date	Location	Start Time	End Time	Week #
December 27, 2018	AvaLAN Wireless	12:30 p.m.	6:00 p.m.	17

Meeting Goals: Work on actuator and arms, design new marker dispenser

Team Members in Attendance:

Ian, Joel, Brooklynn, Jalynn

Tasks	Reflections
Robot Hardware - Arm Actuator	**Ian:** The reinforced pillow blocks are significantly stronger. However, I had added 15mm of extra distance to the pillow block, as we had used spacers on it previously. We realized today that the 15mm spacers are unnecessary, so we cannot use the new pillow block. We're going to revert the pillow block back to the original length (but with the reinforced revision) and reprint them. Finally, the larger pulleys take out all of the slack in the belt. Mr. Nelson from AvaLAN, brought over his postage scale to see what Vera's weight is – just a hair under 40 pounds!
Robot Hardware -Marker Dispenser	**Brooklynn:** Today, I got to see in person the dual telescoping arms for the intake for the first time, and it looks beautiful. So this meant that I got to see how much room I had for version 2 of the marker dispenser and how light it had to be. While I continued to think about it, I grabbed out one of the big long zip ties out of the zip tie bucket to play with it. Then, for fun, I stuck it through the hole in Jayne Weeble's head (sorry) and swung him around on it. Next thing I knew, I had an idea in my head so I took Jayne still swinging on the zip tie over to Mr. Jeff and Ian to show it to them. Mr. Jeff gave me the rest of the idea for the version 2 of the marker dispenser. So I went to the screw box for something long and found an axle and went to ask Ian if I could go and bend it, and he let me bend one that wouldn't be used again. So I went and b ent it in a hook-like shape but before I could attach it, I still needed to wait for the arms to be finished.
Engineering Notebook - Meeting Entries - Display Boards	**Jalynn:** Today, I spent the meeting working on and editing the meeting entries. Ms. Jean and Brooklynn were working on the new display boards, so I also printed out summaries for our two latest outreach events: Nerdcon and the scrimmage we hosted on December 15th. I also tried to figure out how to print photos since Kye wasn't here, but the photos we needed weren't on our computers. We called Ms. Cindy, and she said she would get the photos on a flash drive, so we can download them tomorrow.

Eureka!

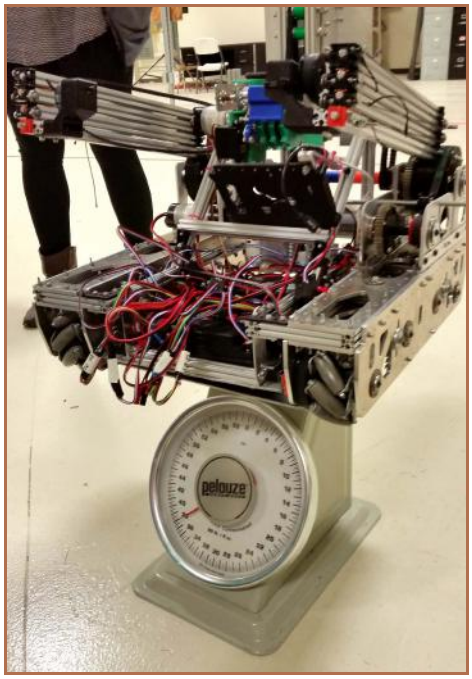

40 lbs.!

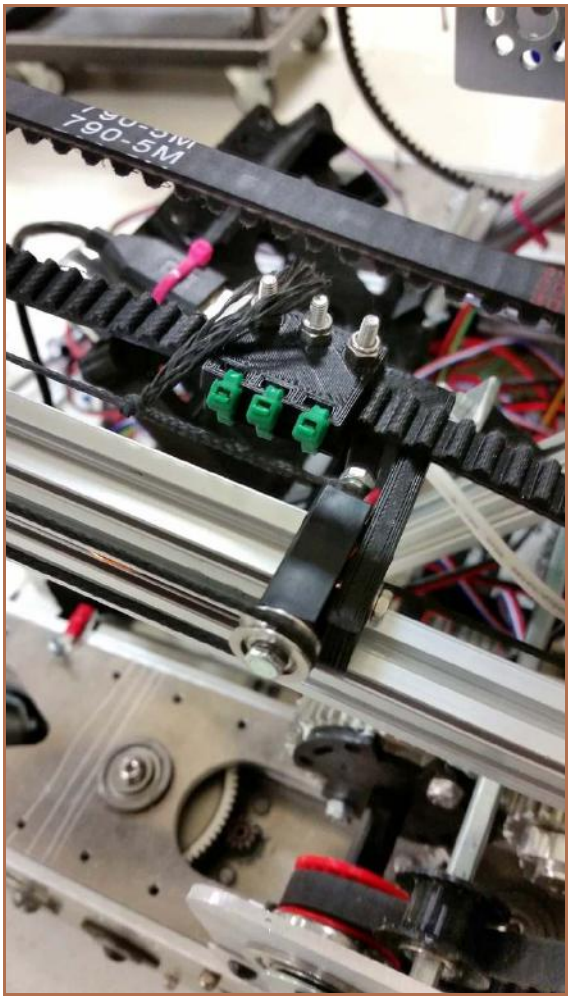

Close-up of the belt clamp attaching the extension actuator belt to the first stage of the telescoping arms

BROWNCOATS
Team 7842 Engineering Notebook - Rover Ruckus

Date	Location	Start Time	End Time	Week #
December 28, 2018	AvaLAN Wireless	2:00 p.m.	6:00 p.m.	17
Meeting Goals: Worked on the actuator and arms				
Team Members in Attendance:				
Ian, Megan, Jalynn, Kye				

Tasks	Reflections
Robot Hardware - Arm Actuator	**Ian:** The third revision of the pillow blocks are much better than the first. However, there is an interference between some bolt heads on the extrusion end caps (used for anchoring string). To combat this, we're going to reprint the pillow blocks again with 5mm added to the length of each. This should provide enough clearance to allow the slide to move freely.
Robot Hardware - Telescoping Arms	**Megan:** On Friday, December 28th, I finished stringing the arms, which was now mounted on the robot. One side of the lift had already been strung, so on the other, I strung each piece of string using a needle, and then tied it off at the anchor point. There was still some tensioning that needed to be completed, but in order to finish that, a couple of other parts needed to be finished first, so at our next meeting, I'm going to finish stringing it.

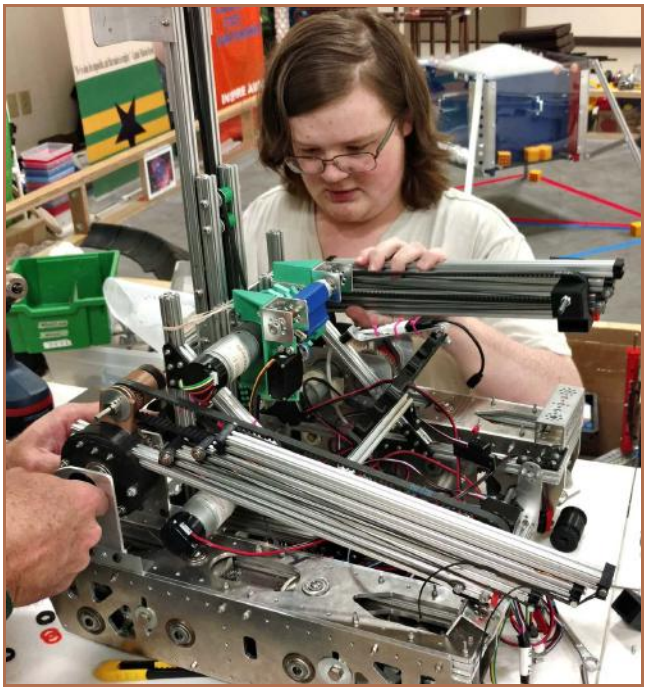

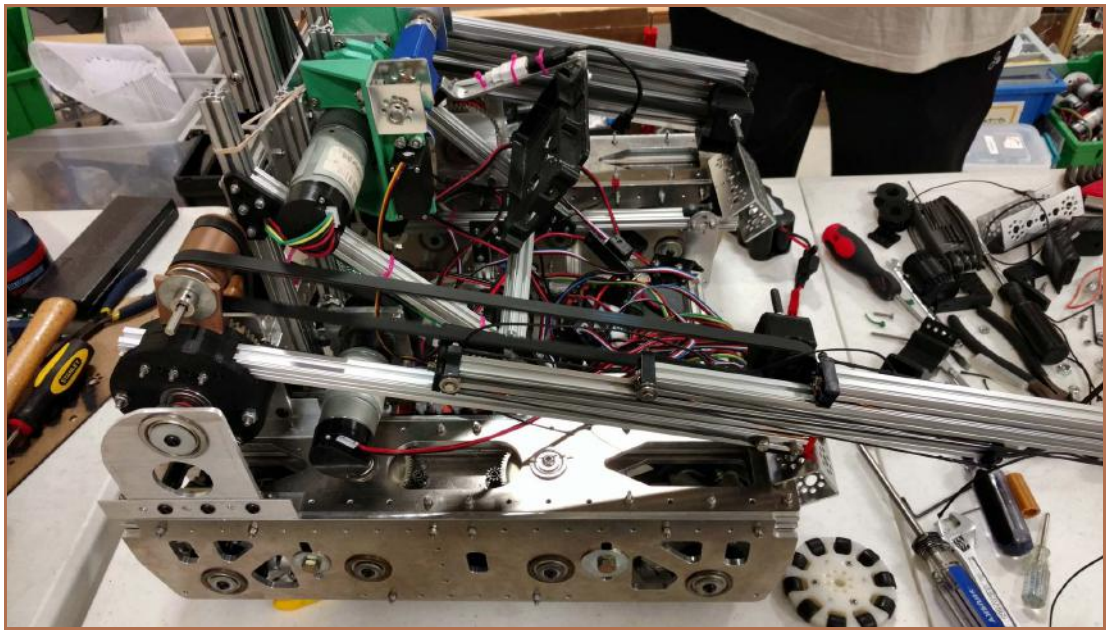

BROWNCOATS
Team 7842 Engineering Notebook - Rover Ruckus

Date	Location	Start Time	End Time	Week #
December 29, 2018	AvaLAN Wireless	12:00 p.m.	6:00 p.m.	17
Meeting Goals: Continue working on arms and actuator				
Team Members in Attendance:				
Ian, Megan, Kye, Jalynn, Joel				

Tasks	Reflections
Robot Hardware - Telescoping Arms	**Megan:** On Saturday, December 29th, I realized that I needed to make some serious changes to the telescoping arms. The sliders that we'd wrapped wire around were still giving us problems, so we wanted to go back to the way we used to make these lifts in past seasons, with the sliders from the original REV Linear Motion Kit. To keep those sliders in place, we would use two screws and a nut on either side of the slider. The only problem with this is that the original sliders were much longer, so we'd lose some extension, which we couldn't afford to give up. So, we cut the sliders in half, so they were much smaller, and we still used the end caps from the V2 kit, which allowed us to use only one screw to hold the slider in place, as the end cap would also help to keep it there. Once we changed out all of the V2 sliders and added the cut ones, it was immediately noticeable how much smoother and rigid the lift was. At our next meeting, I'm going to add strings to the arms. **Joel:** I helped with some of the telescoping arms on the robot. Later we printed 5 inch combine plates. I tested the combine plates to see if they would pull things in like a dust pan intake. I did this by attaching the combine wheels to a square frame with bronze bushings and slide an axle all the way through, then attached a belt gear to the end of the axle which then connected to the motor with a belt, and the motor was mounted to the frame using a tetrix motor mount. Then we talked about the telescoping arms on the robot.
Robot Hardware - Arm Actuator	**Ian:** The fourth revision of the pillow block seems successful! There's adequate clearance between the belt and the anchoring screws. Most of the rest of the day was taken up by a partial rebuild of the slides, due to an issue with screw mounting places.

Engineering Notebook -Display Boards	**Kye:** We printed out more photos for our display boards, and we pinned the photos to the board after they were cut. **Jalynn:** Today, I was super busy typing up and printing out the labels and summaries for the display boards. I first worked on getting the Competition board label to look like the other boards' labels using Text Art. The labels we are using on the other boards were made a couple years ago, so I had to do a lot of color and font adjustments to get it to match. Or at least close to matching. Then, I made a label for our new "Ghosts of Browncoats' Past" board the same way and also made new labels for the photos of Vera's building process. While I was doing that, Ms. Jean had the idea of printing out two cute little ghosts to put on the new board, so I edited a Halloween-themed piece of clipart and used that. Finally, before leaving, we ran through judging. It was my first time doing judging, so it was a bit of a struggle. We're hoping to meet tomorrow to just practice judging, so hopefully, I'll do better then.

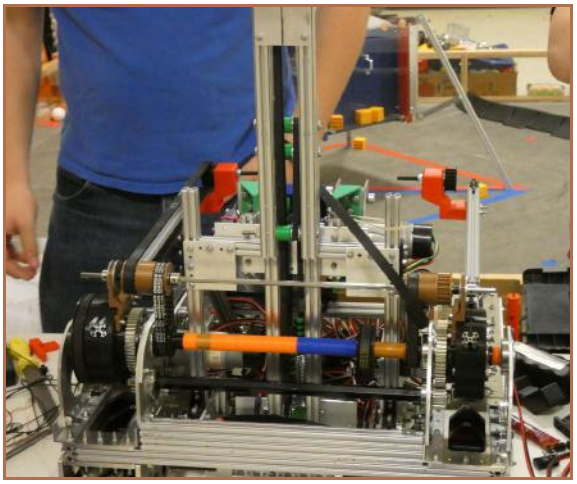

BROWNCOATS
Team 7842 Engineering Notebook - Rover Ruckus

Date	Location	Start Time	End Time	Week #
December 30, 2018	AvaLAN Wireless	12:00 p.m.	6:00 p.m.	17
Meeting Goals: Worked on the robot, Practiced judging				
Team Members in Attendance:				
Ian, Megan, Kye, Brooklynn, Jalynn				

Tasks	Reflections
Robot Hardware - Telescoping Arms	**Megan:** On Sunday, December 30th, I began re-stringing the two arms. It was fairly easy to do, as we hadn't untied any of the knots from the previous revision, so all I had to do was tension the string once I'd gotten everything in place. By the end of the day, I'd gotten the whole thing tensioned as it needed to be, and dabbed a little bit of super glue on all of the knots to hopefully keep them in place. Now all we have to do is power the belt on the actuator so it can extend.
Robot Hardware - Intake/Collector	**Ian:** I spent most of the day assembling an intake prototype that I modeled in Solidworks yesterday and throughout the previous week. The idea is to filter balls out of the intake entirely and ignore them, because there are fewer balls. Cubes would then be swept into a hopper, where they would be stored until ready to deposit. A plate would fold out and allow the cubes to fall into the cube depot (from the ball depot side, or the cube depot side). We discovered that the original sweeper lengths were too short to effectively filter out balls, and the intake worked much better when the sweeper was longer.
Judging Practice	**Jalynn:** Today, those of us who will be going to Arkansas in January met to practice judging. We had to wait a little bit for everyone to get here, so Mr. Monte made us all bullet-points while we waited. We ran through the script several times and each time we got a little better. Our mentors told us to practice at home and time ourselves.

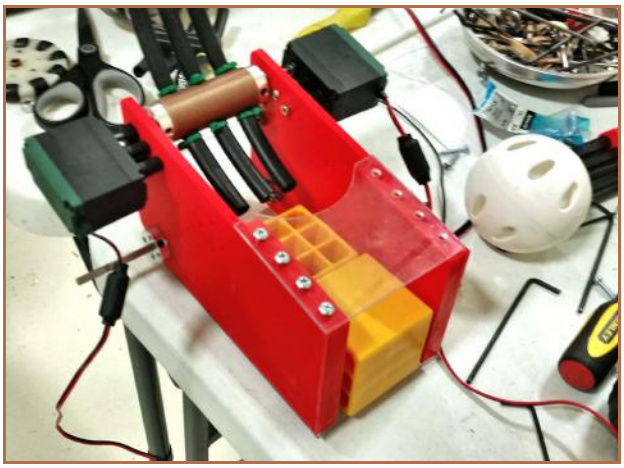

Ian testing his new intake prototype

Judging practice